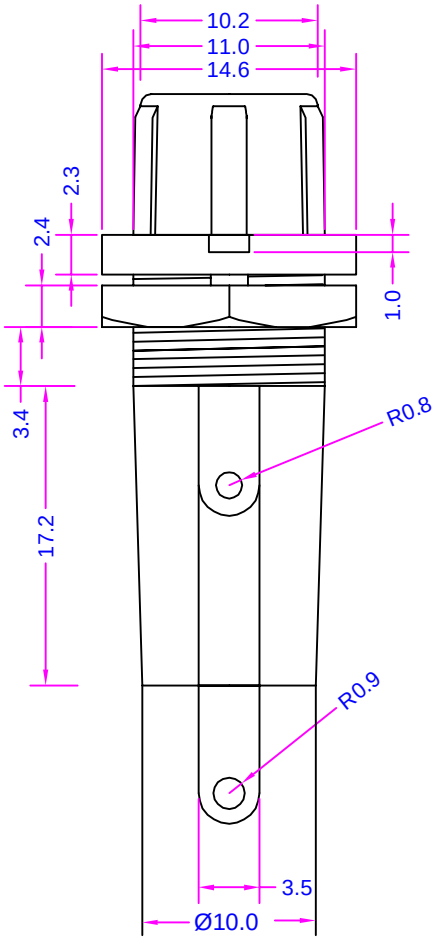
10.2
11.0
14.6
2.3
2.4
1.0
3.4
17.2
R0.8
R0.9
3.5
Ø10.0

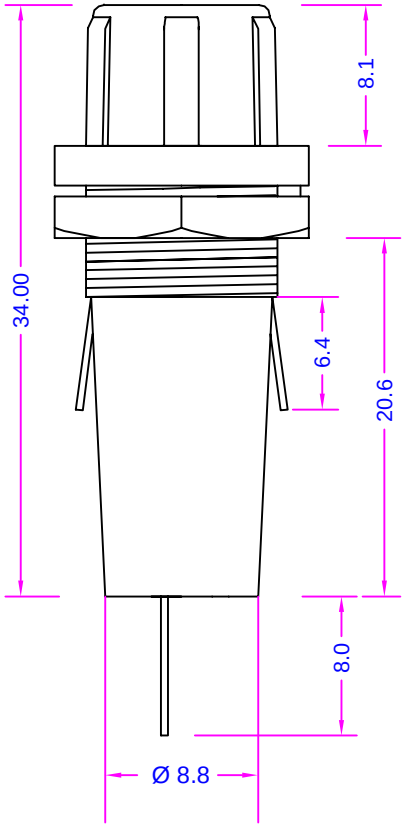
34.00
8.1
6.4
20.6
8.0
Ø 8.8

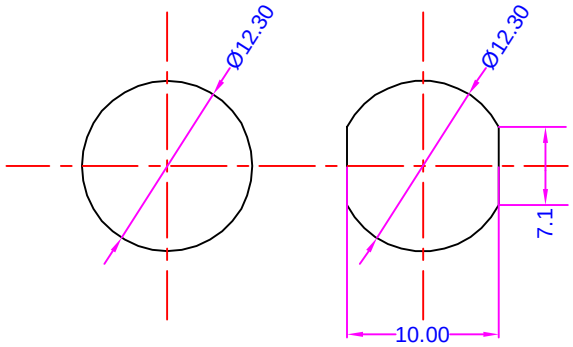
Ø12.30
Ø12.30
7.1
10.00