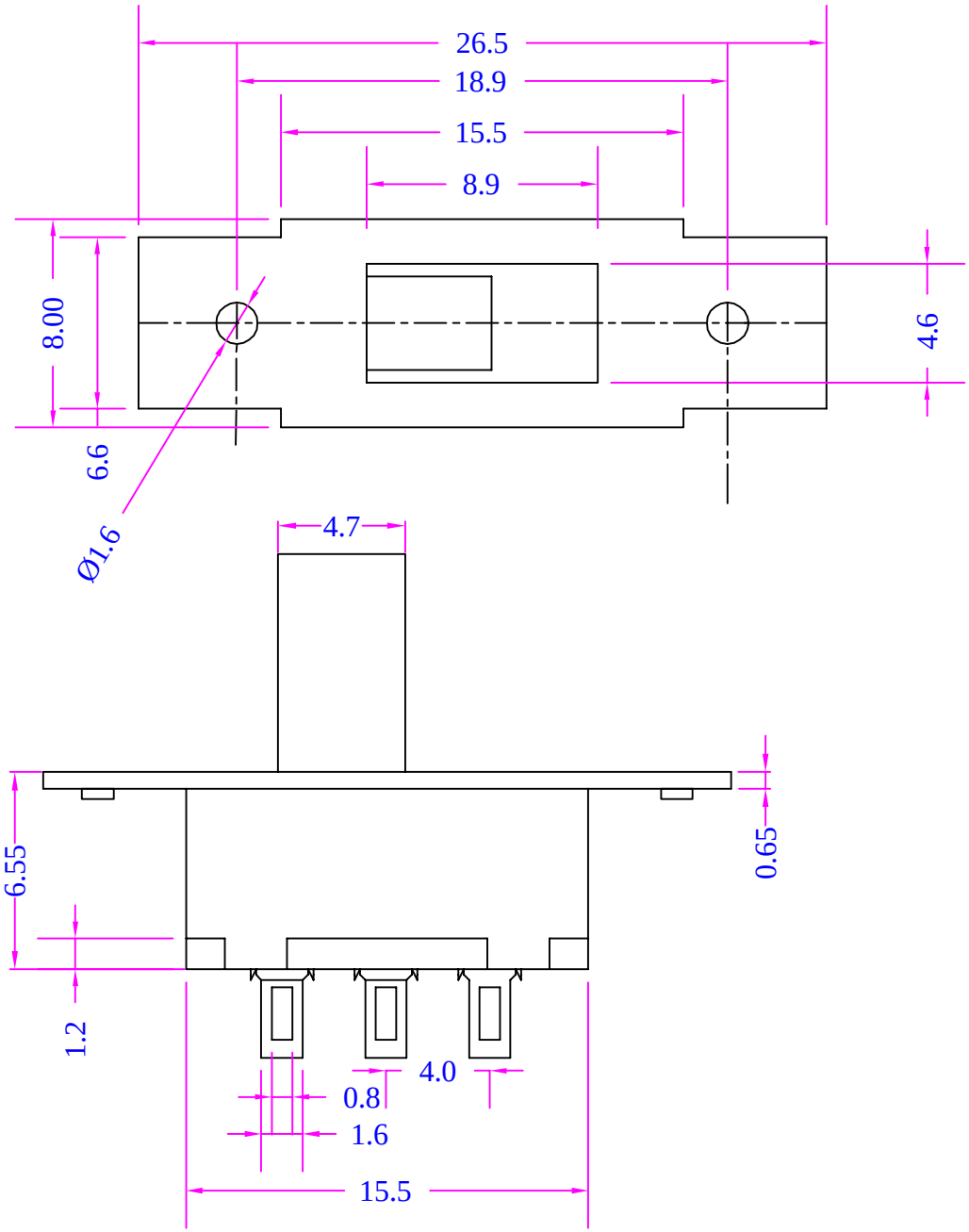
26.5
18.9
15.5
8.9
8.00
6.6
4.6
Ø1.6
4.7
6.55
1.2
0.65
4.0
0.8
1.6
15.5

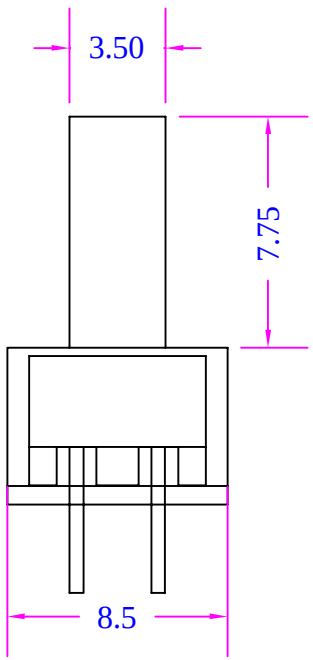
3.50
7.75
8.5