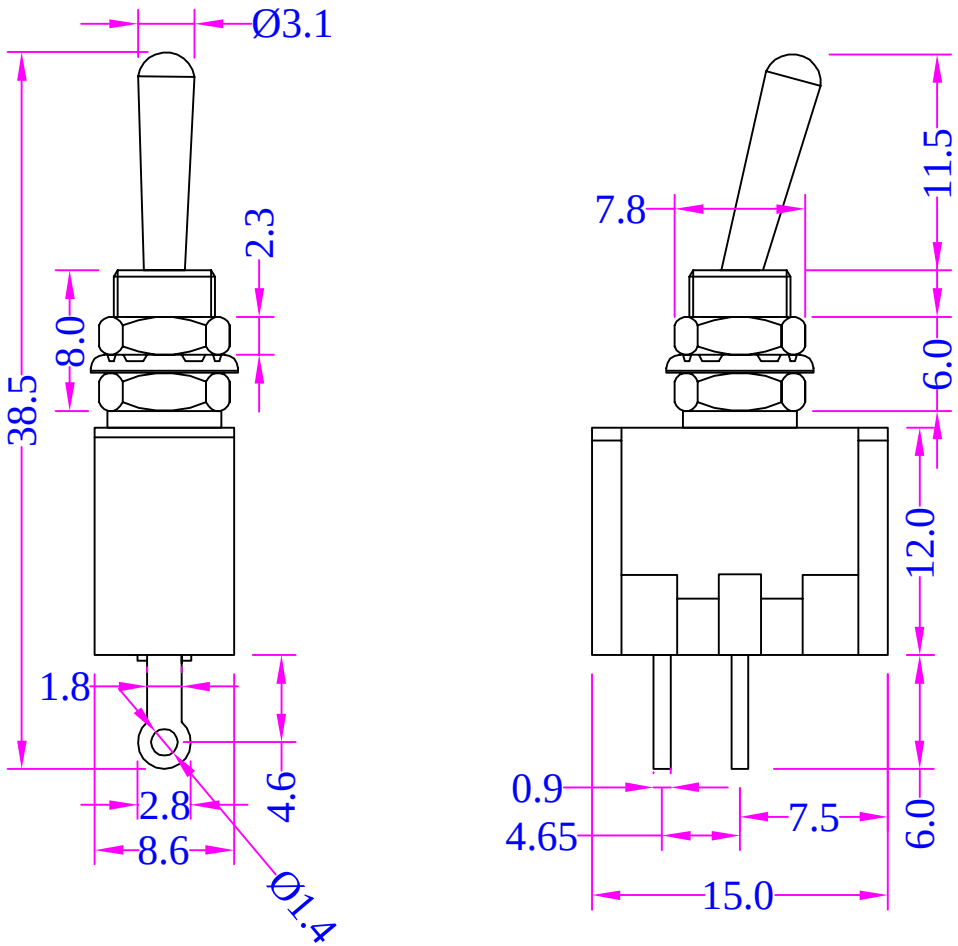

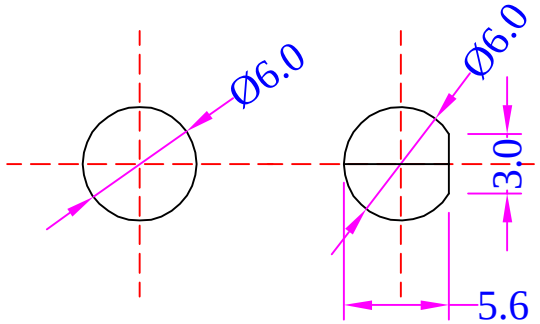

Mounting Hole