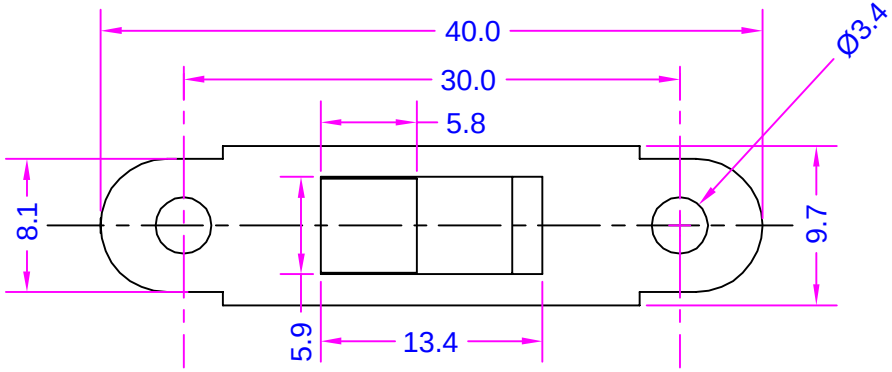
40.0
30.0
5.8
Ø3.4
8.1
9.7
5.9
13.4

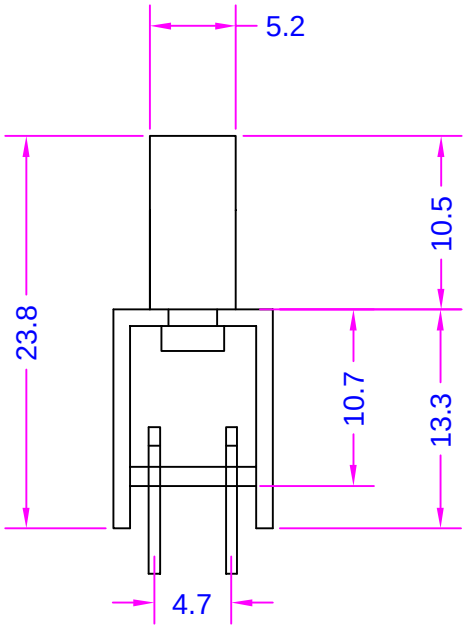
5.2
23.8
10.5
10.7
13.3
4.7

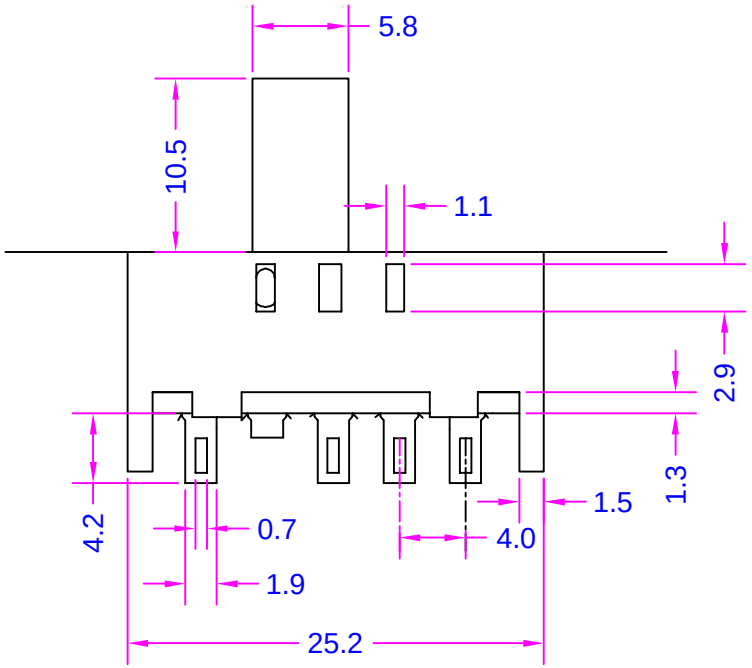
5.8
10.5
1.1
2.9
1.3
4.2
0.7
1.9
4.0
1.5
25.2