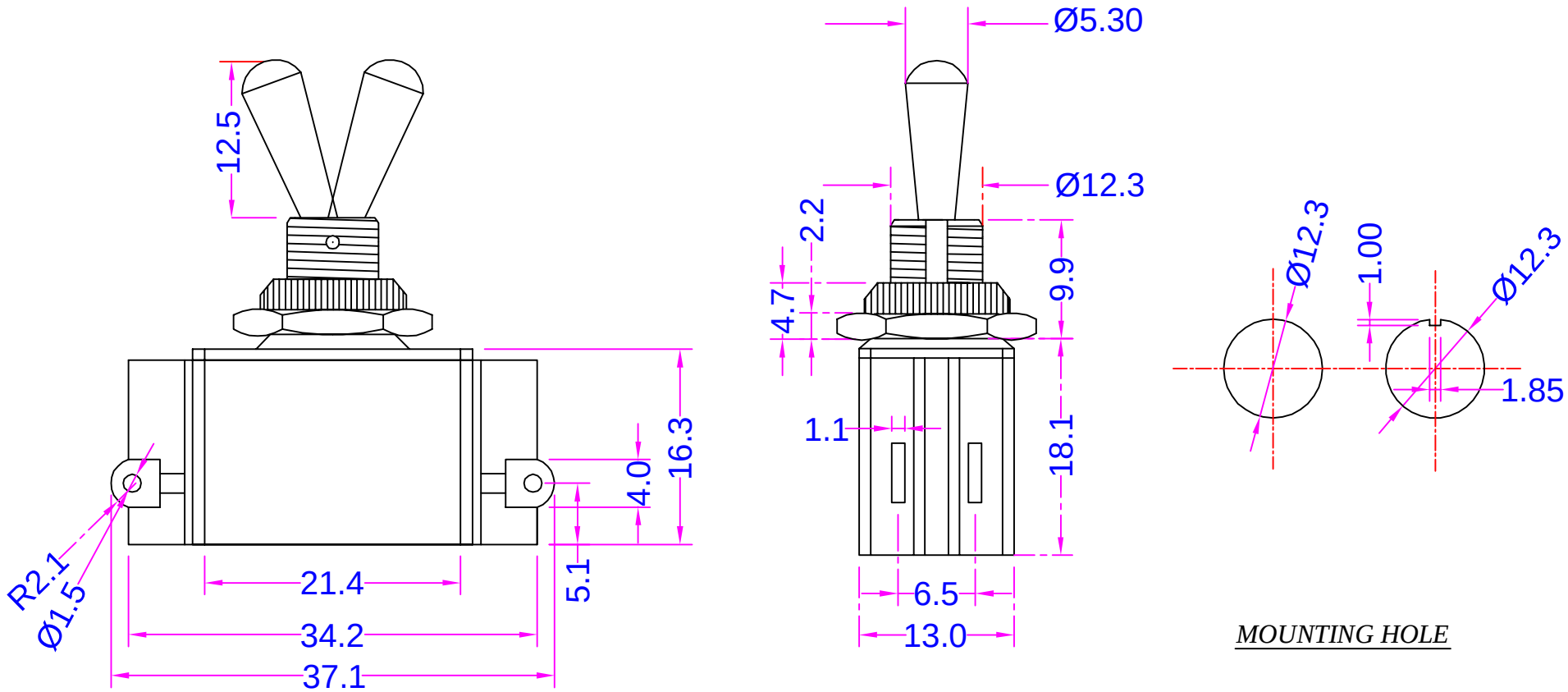
12.5
16.3
4.0
5.1
R2.1
Ø1.5
21.4
34.2
37.1
Ø5.30
Ø12.3
2.2
4.7
9.9
1.1
18.1
6.5
13.0
Ø12.3
1.00
Ø12.3
1.85
MOUNTING HOLE